020400 GOVERNOR ## V2403-M-DI-E-TS6T

L5228 ENGINE

Update Date: 2026/03/03
Printing Date: 2026/08/08

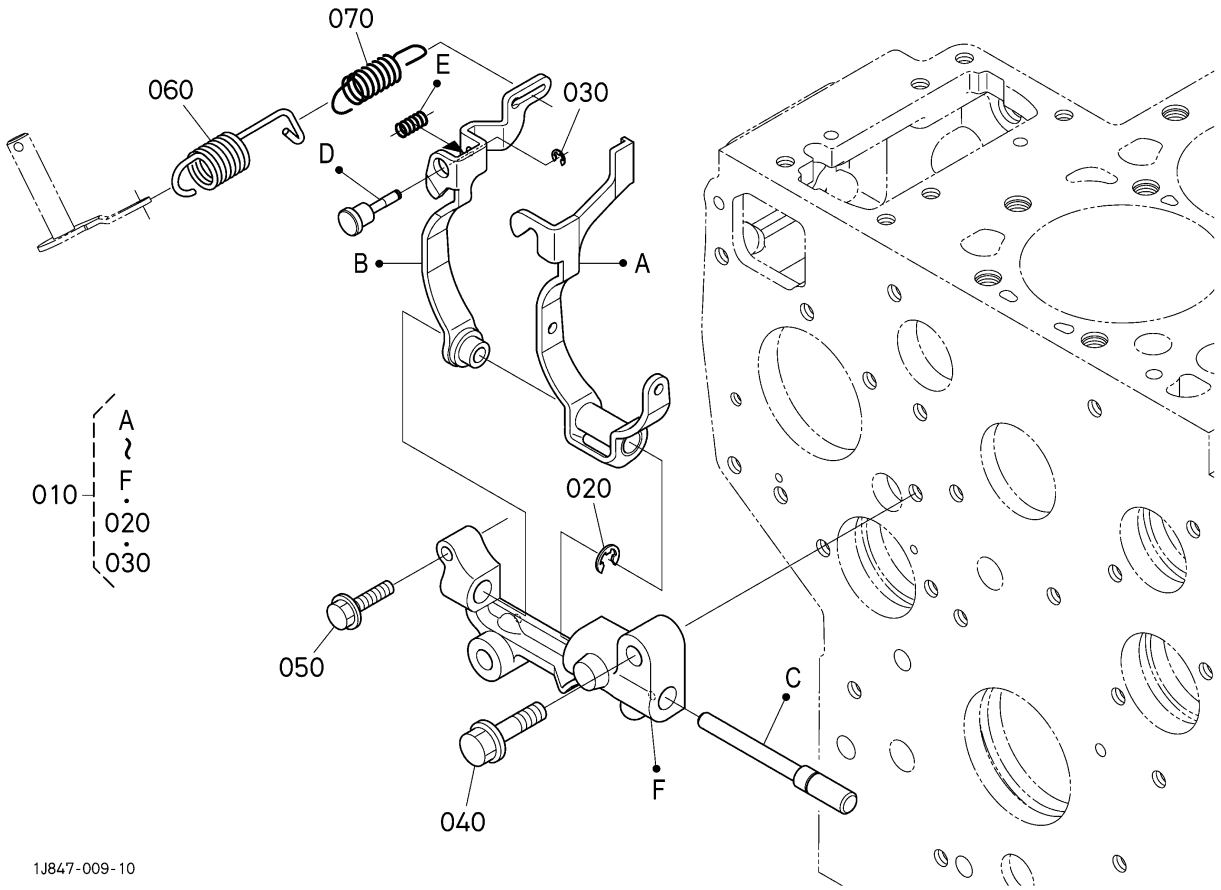

═ Interchangeable N| Not Interchangeable >> New for Old << Old for New

No.	Part No.	Part Name	Qty	IC	Serial No./PIN	Remarks	Kg
010	1J847-56050	LEVER,ASSY(FORK)	1				0.31
020	04613-50080	CIR-CLIP,EXTERNAL	1				0.001
030	04613-50030	CIR CLIP,EXTERNAL	1				0.001
040	01754-50830	BOLT,FLANGE	2				0.016
050	01754-50625	BOLT,FLANGE	1				0.008
060	1J864-56410	SPRING(GOVERNOR,1)	1				0.005
070	1J864-56420	SPRING(GOVERNOR,2)	1				0.005

This content is the information at the time of publication on this site,
information such as the part name and part number may be different from the present.
Illustrations of products and parts that are posted are image diagrams.